8’ Dye Sub Front Table Throw

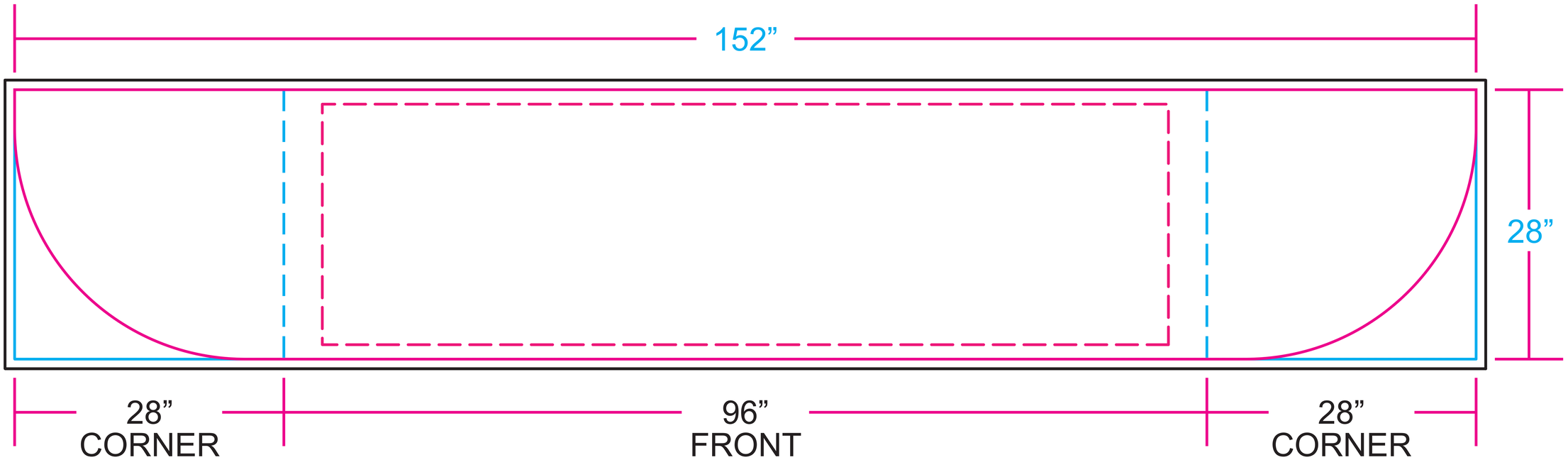

KEEP ALL CRUCIAL ARTWORK ELEMENTS SUCH AS TEXT/LOGOS/IMAGES WITHIN LIVE AREA OF 88”w x 25”h

PRINT SIZE: 154”w X 30”h

FINAL SIZE: 152”w X 28”h

TABLE FRONT: 96”w X 28”h

FRONT LIVE AREA: 88”w X 25”h